VOLTAGE FEEDBACK

BJT DC BIASING

prepared by:

Gyro A. Madrona

Electronics Engineer

GRADING SYSTEM

FINAL GRADE

30%

PRELIM

30%

MIDTERM

40%

ENDTERM

TERM GRADE

50%

WEEKLY

50%

EXAM

100%

LABORATORY

PENALTY

0

ABSENT

3

45-min LATE

7 max

15-min LATE

TOPIC OUTLINE

DC Bias with Voltage Feedback

- Base-Emitter Loop
- Collector-Emitter Loop
- Load Line Analysis

DC BIAS WITH VOLTAGE FEEDBACK

BASE-EMITTER LOOP

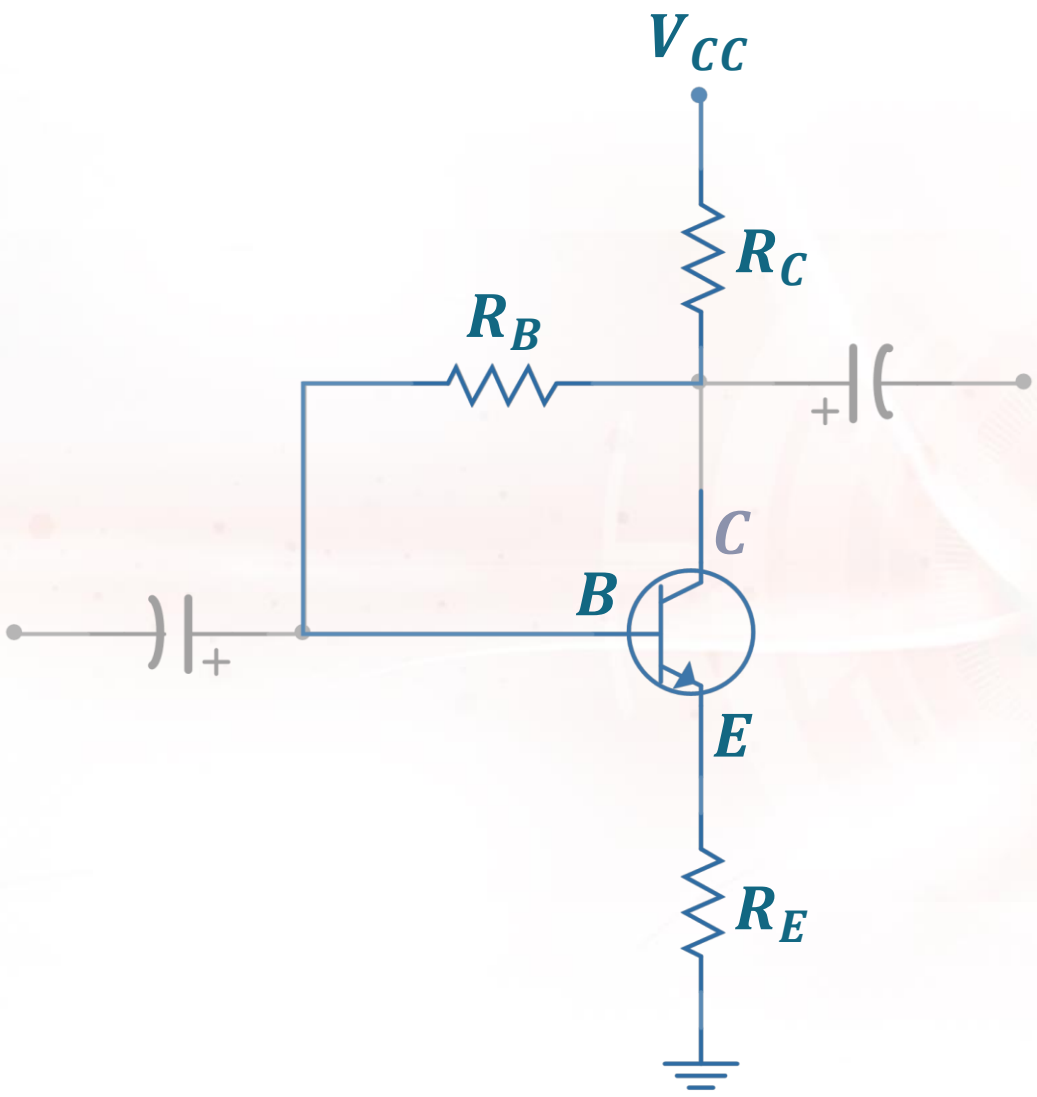

KVL @ B-E,

$$i_B = \frac{V_{CC} - v_{BE}}{R_B + \beta(R_C + R_E)}$$

COLLECTOR-EMITTER LOOP

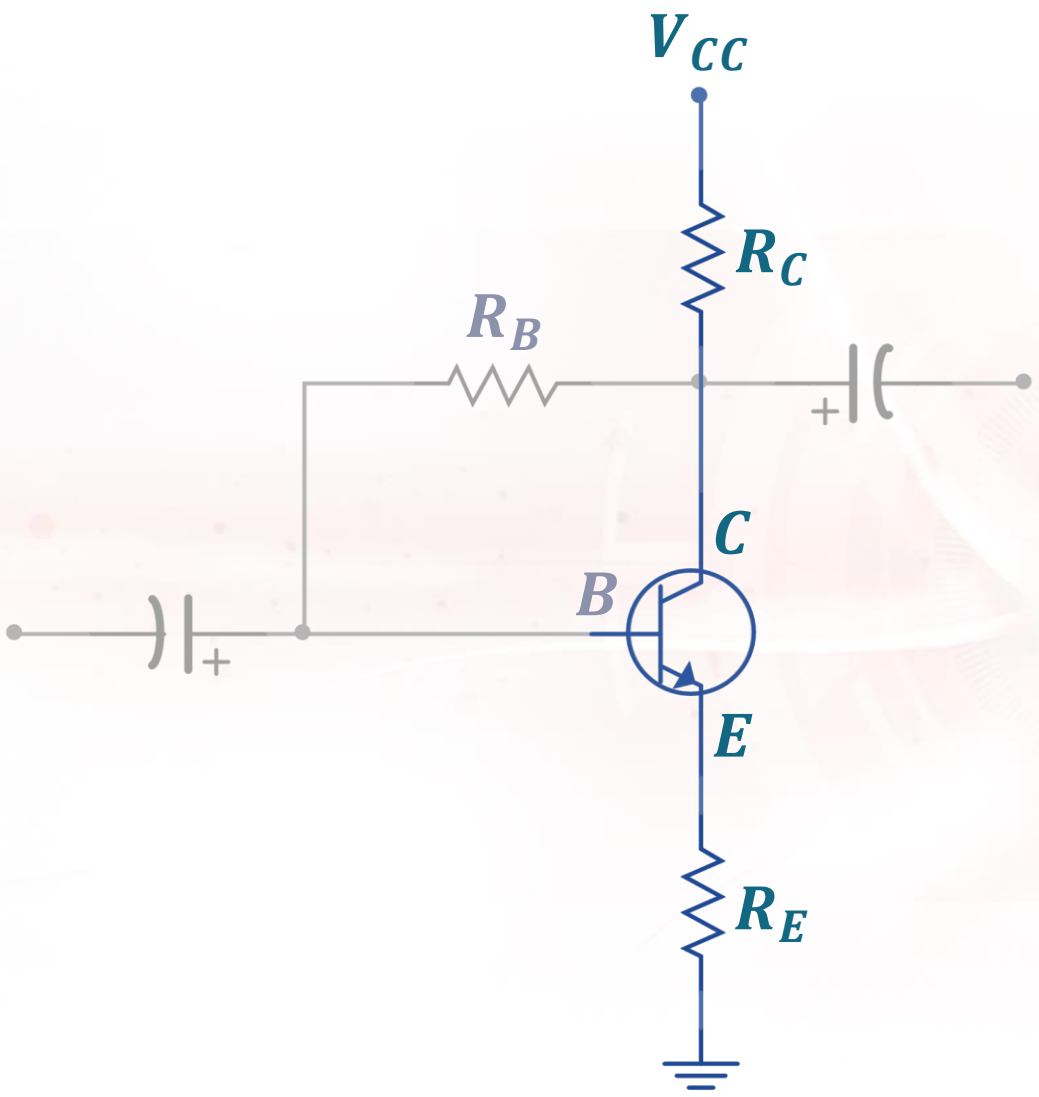

KVL @ C-E,

$$v_{CE} = V_{CC} - i_C(R_C + R_E)$$

Determine the quiescent level of i_{CQ} and v_{CEQ} for the given **network**.

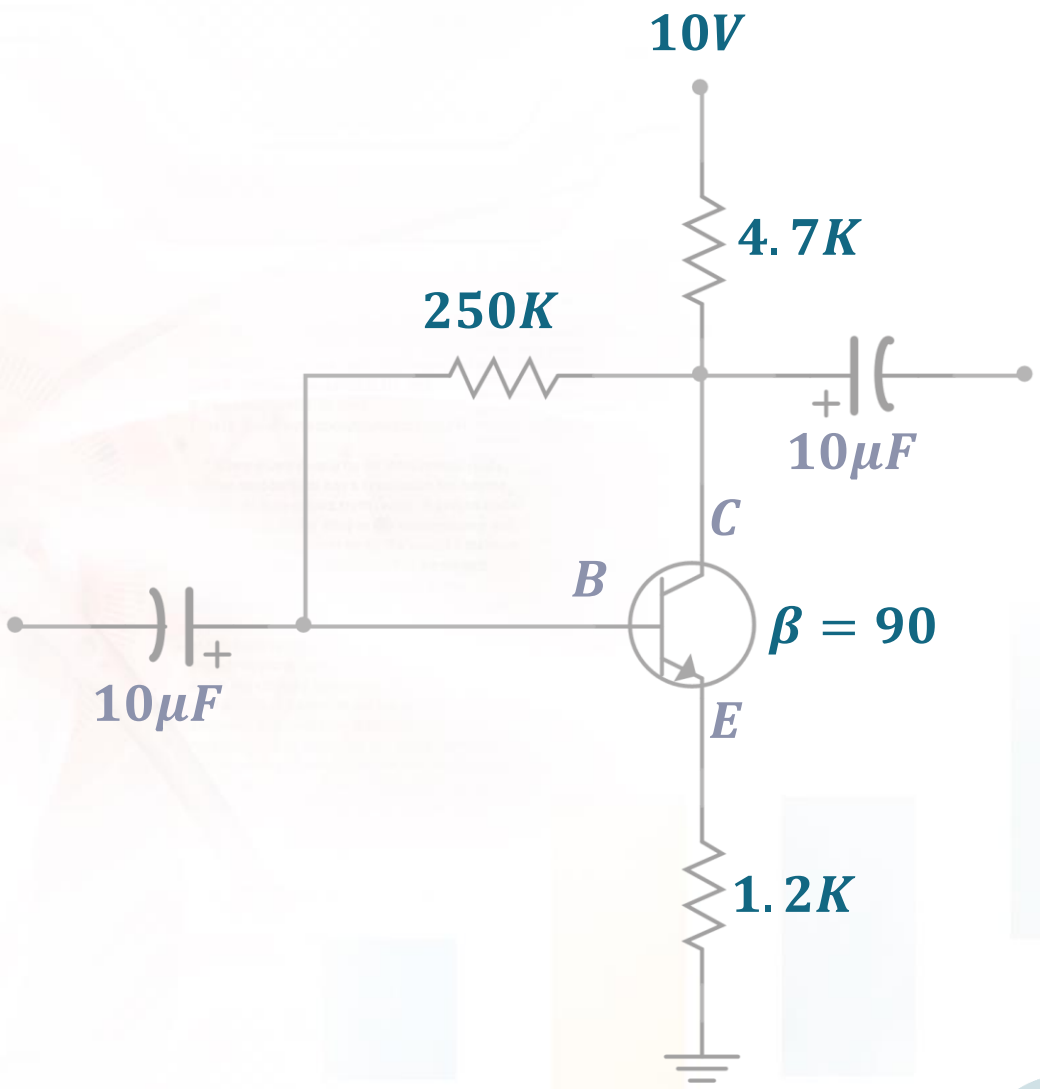

i_{CQ-}

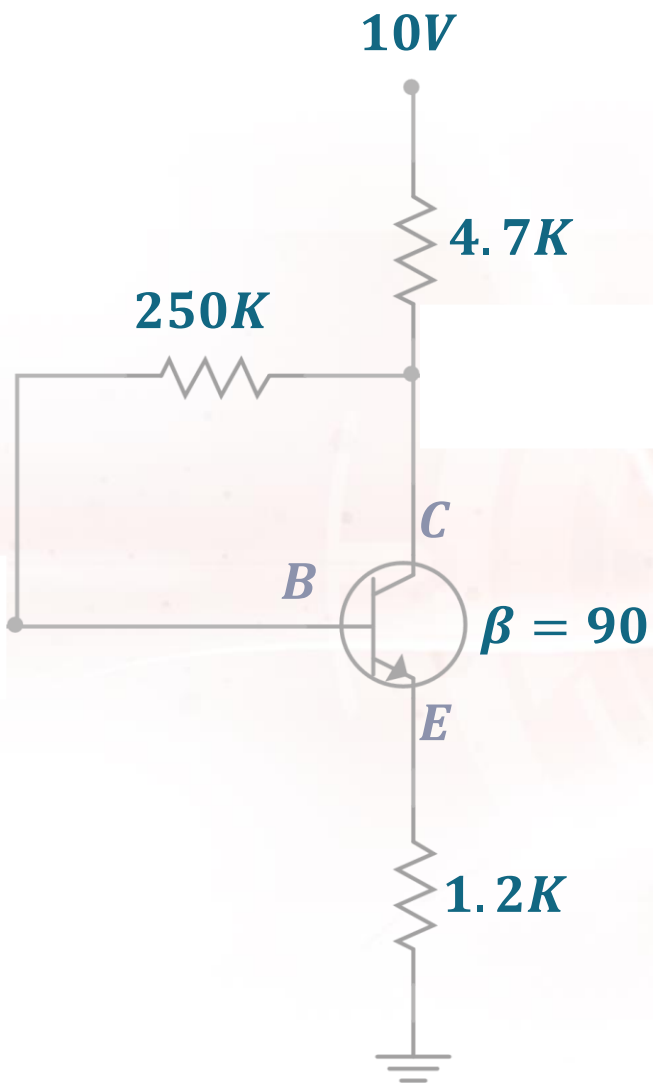

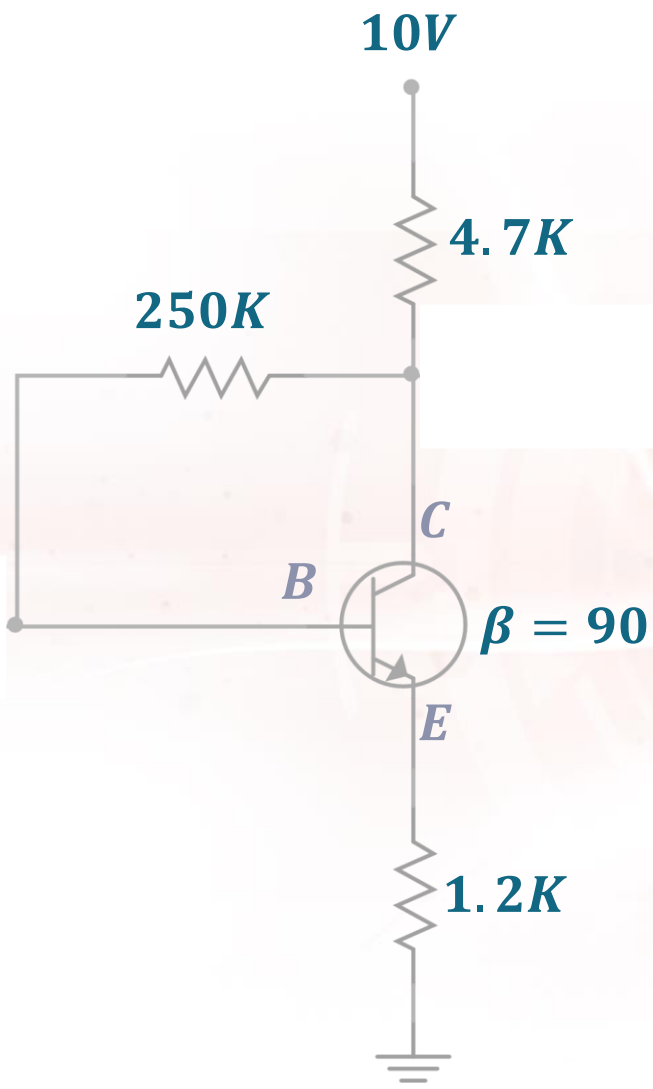
10V
4.7K
250K
C
B
β = 90
E
1.2K

SATURATION POINT

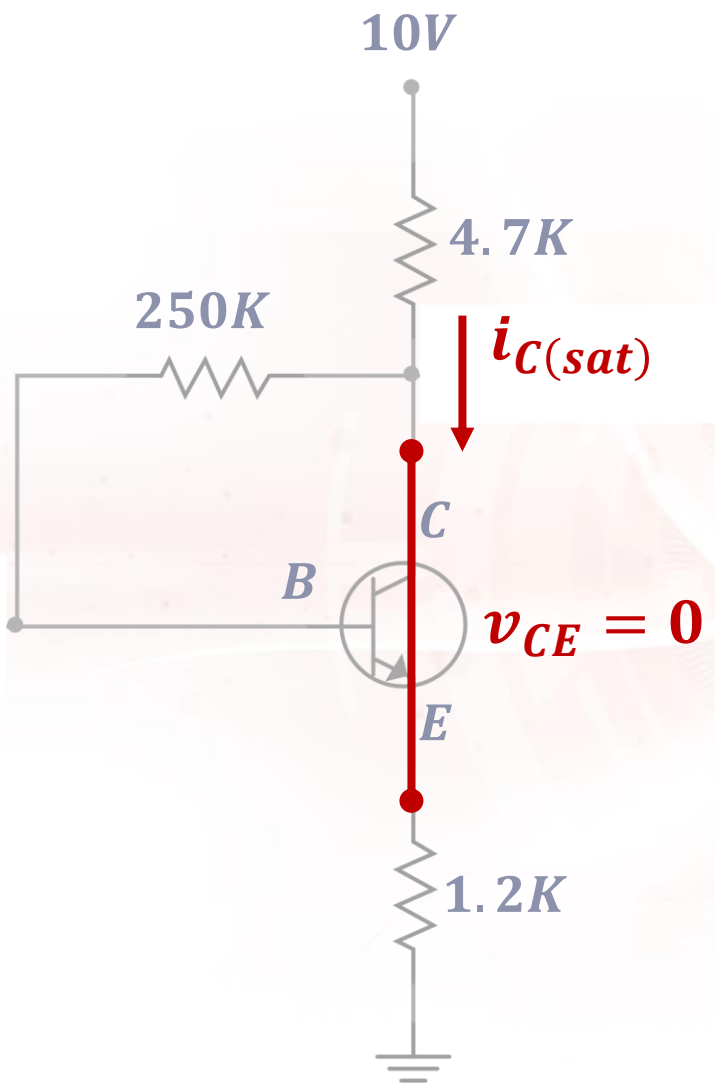

"Mental **Short**"

SATURATION POINT

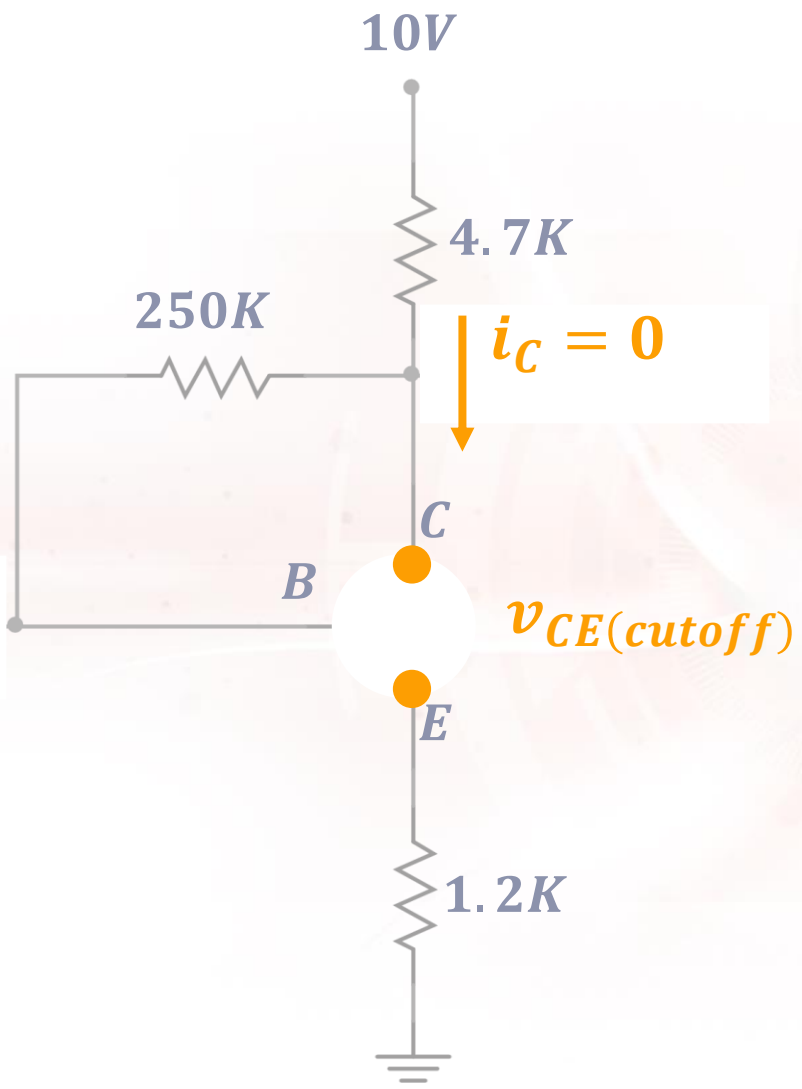

"Mental Open"

LOAD LINE ANALYSIS

LABORATORY